Hi-MOLD6500

HYUNDAI WIA Vertical Machining Center for Mold Machining

HYUNDAI WIA

Technical Leader

The Vertical Machining Center Hi-MOLD6500 designed by Hyundai WIA with years of expertise and the latest technology, ensures performance requirements of the mold industry.

Hi-MOLD6500

[Option]

Table Size	mm(in)	1,200×650 (47.2″×25.6″)
Max. Load Capacity	kg(lb)	1,000 (2,205)
Spindle Taper	-	BBT40
Spindle Speed	r/min	20,000 [24,000]
Spindle Output	kW(HP)	22/18.5 (29.5/24.8) [22/18.5 (29.5/24.8)]
No. of Tools	EA	30
Travel(X/Y/Z)	mm(in)	1,100/650/550 (43.3″/25.6/21.7″)
Rapid Traverse Rate	m/min(ipm)	40/40/40 (1,575/1,575/1,575)

State of the art Technology for
Machining Precision Molds

Hi-MOLD6500

- Bridge type machining center for utmost quality of molding
- High precision spindle design with accurate angular contact bearing
- 20,000 rpm built-in spindle for high precision molding (Option : 24,000 rpm)
- Ball screw nut cooling system in all axes as standard
- Hyundai WIA mold package for optimal mold machining

01

Hi-MOLD6500

Basic Features

Super Quality & Productivity
Vertical Machining Center for Mold Machining

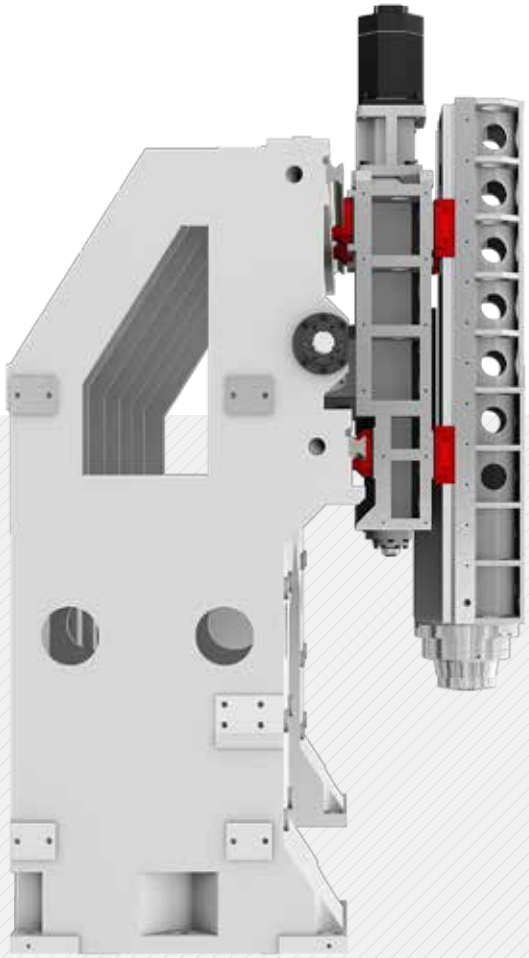

01

Bridge Type Column Structure

Hi-MOLD6500 is built upon a bridge type column frame. The greatest benefit of the double column machining center is the increase of rigidity and the decrease of heat generation. Hence, it retains accuracy and repeatability at the highest levels.

02

Step Type Column Structure

Since the column's X-axis cross beam has incorporated a 'step type' design, the load that occurs at the front during machining has reduced. Furthermore, stability has increased by optimizing the column's weight.

Grease Lubrication Method

Significant cost savings is achieved by incorporating the grease lubrication system versus the oil lubrication method.

03

Built-In Spindle

Maximum spindle speed up to 20,000rpm(Opt: 24,000rpm) is possible due to the installation of ultra precision Angular Ball Bearings.

04

X Type Rib Structure Bed

Hi-MOLD6500 is designed with a highly rigid X type rib structure, showing the best performance in high quality mold machining.

It can also offer powerful cutting and high precision machining due to excellent vibration absorption.

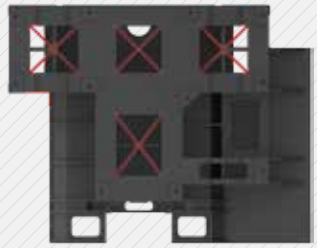

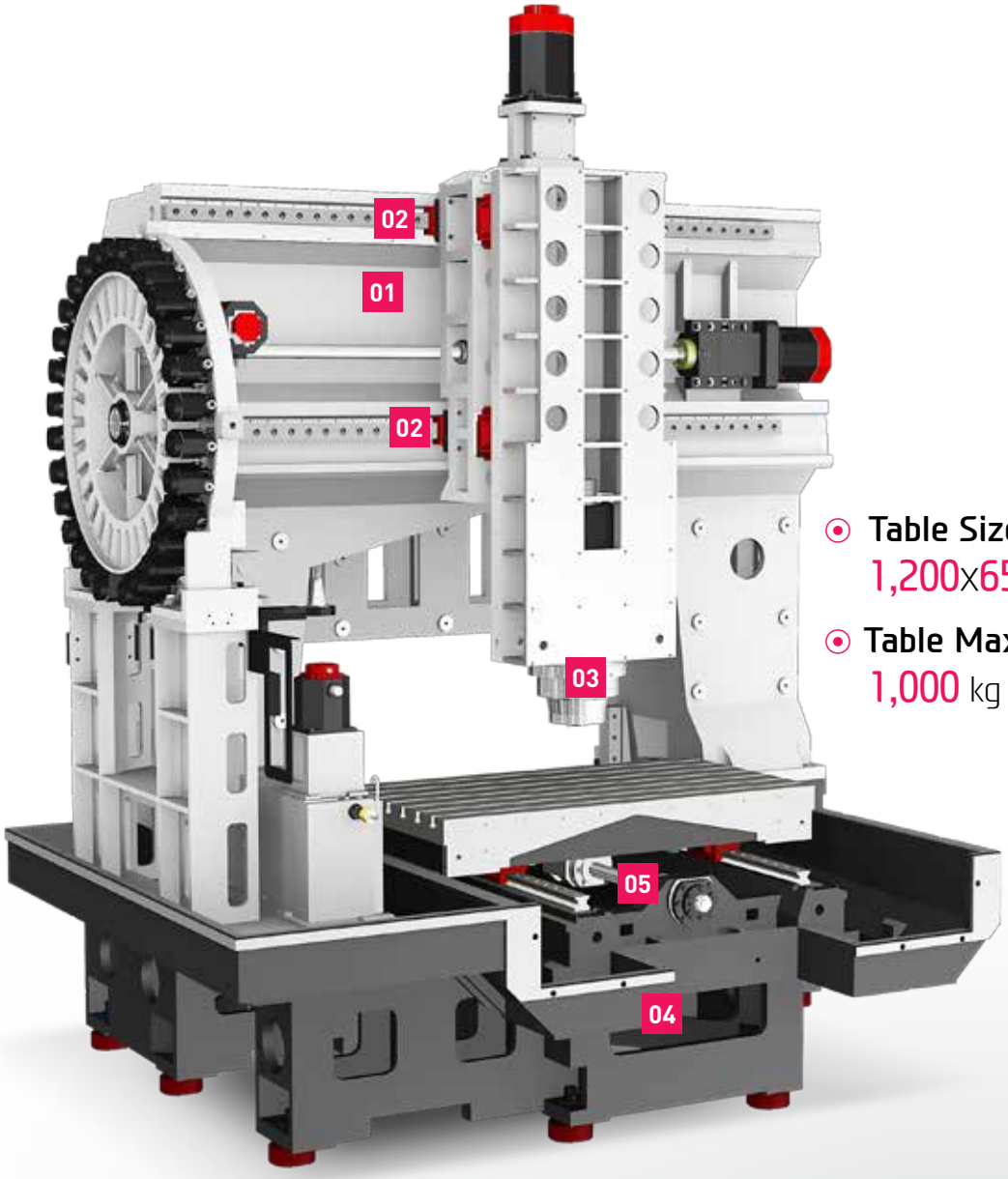

- **Table Size** (LxW)
  1,200x650 mm (47.2"×25.6")
- **Table Max. Load Capacity**
  1,000 kg (2,205 lb)

05 Nut Cooling Ball Screw

HI-MOLD6500 has also adopted ball screw nut cooling system which protects travel axes from thermal displacement.

- **Rapid Traverse Rate** (X/Y/Z axis) : 40/40/40 m/min (1,575/1,575/1,575 ipm)
- **Feed Travel** (X/Y/Z axis) : 1,100/650/550 mm (43.3"/25.6"/21.7")

02

Hi-MOLD6500

High Precision Spindle

Long Lasting High Accuracy & Excellent Performance
Vertical Machining Center

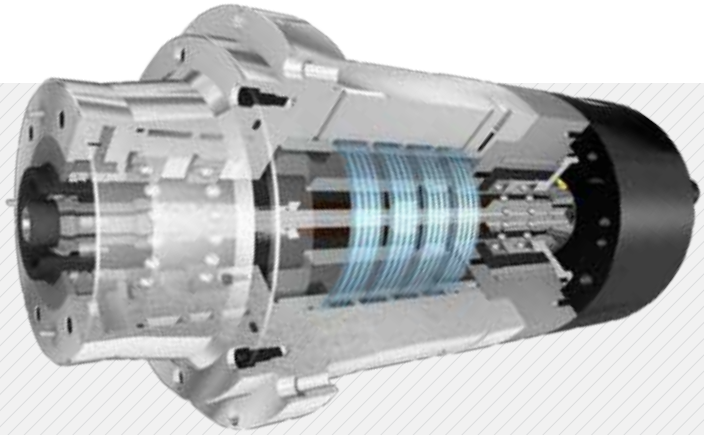

Built-In Spindle

The built-in Spindle, designed with Angular Contact Bearings at front and back, can rotate at 24,000rpm. Also, high speed and high precision machining are possible with its rapid acceleration/deceleration. Especially, it reduces noise and vibration generated by high speed, and minimizes thermal displacement to enable stable machining.

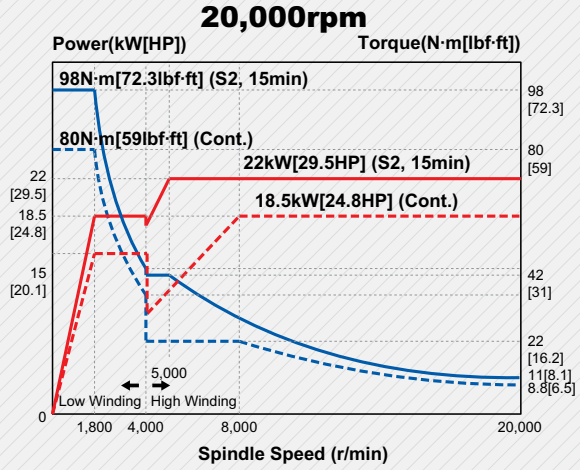

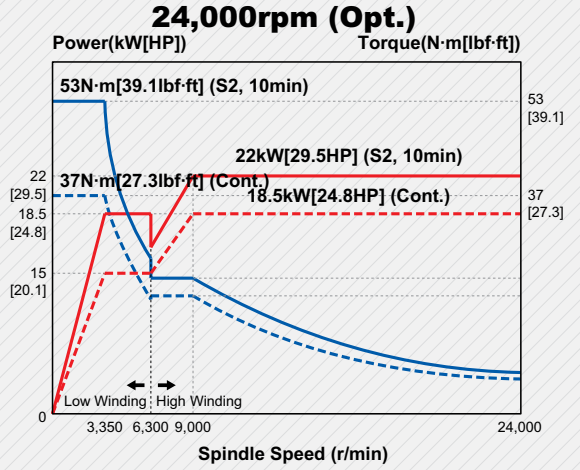

Spindle Cooling

Oil-Air lubrication at spindle bearings is applied to minimize thermal displacement.

Dual Contact Spindle

The Big Plus spindle system (BBT40) provides dual contact between the spindle face and the flange face of the tool holder. This greatly increases tool rigidity, reduces run out and adds significant productivity to machining applications.

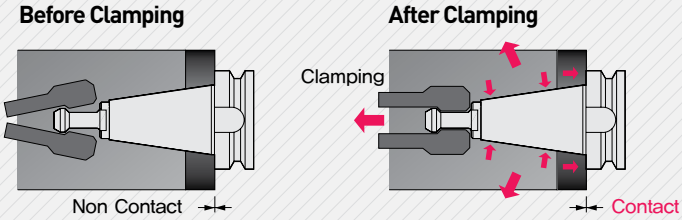

The increase in standard diameter improves rigidity and ATC interactive precision, and Z-axis displacement is prevented which further extends tool life.

20 bar / 70 bar (290 psi / 1,015 psi)

Through Spindle Coolant OPTION

Through Spindle Coolant is exceedingly useful when drilling deep holes. It helps increase the lifetime of the tool, while decreasing cycle time

03

Hi-MOLD6500

Table & Magazine

High Productivity Achieved with High Rigidity, Accuracy Machining

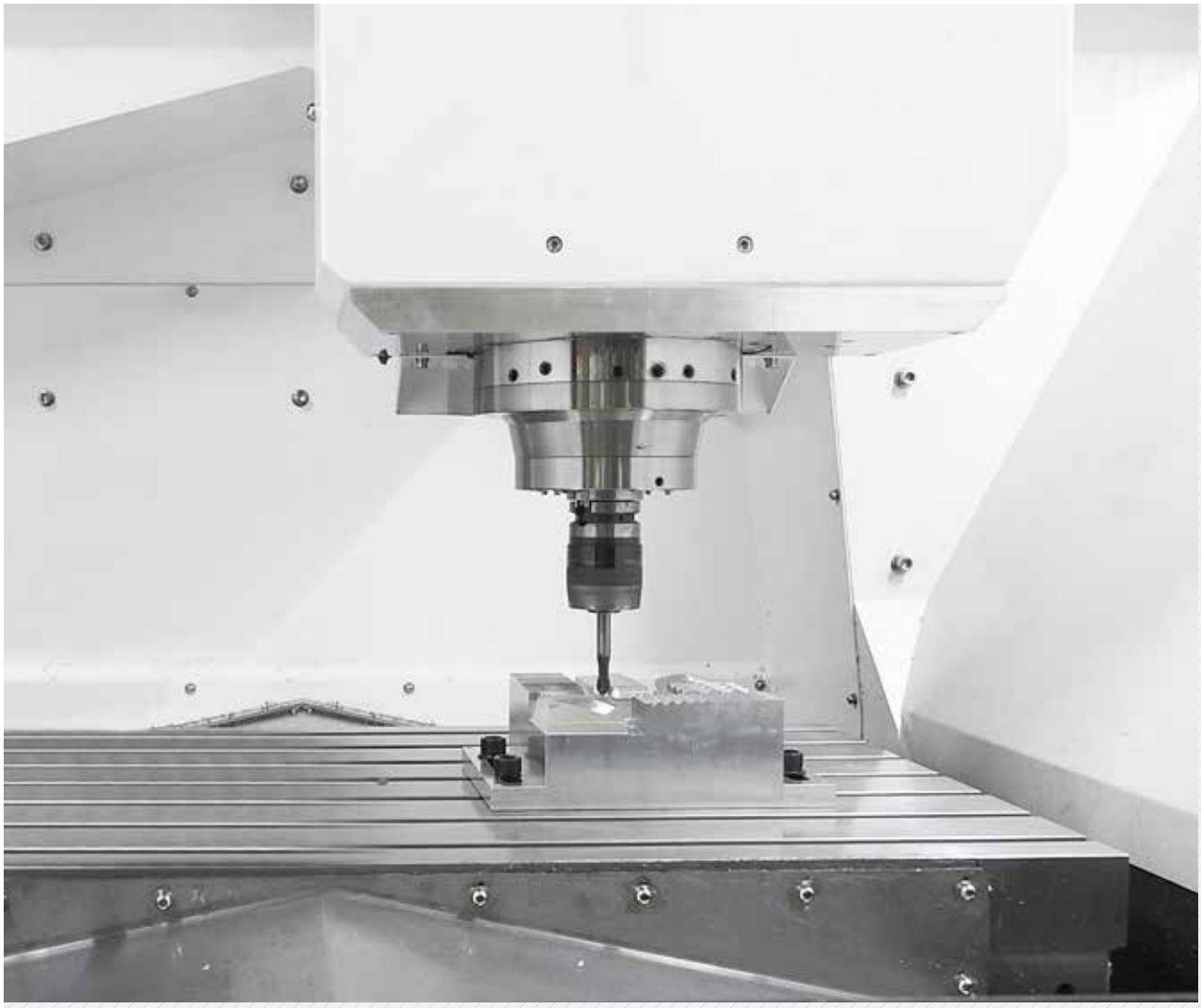

Table & Machining Area

Compared to competitive machines, the Hi-Mold6500 has a large work envelop making setup and use easy and convenient for the operator.

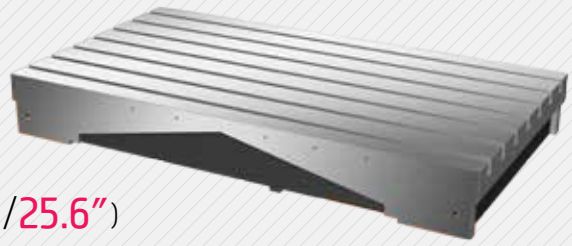

- Table Size (X/Y axis) : 1,200/650 mm (47.2″/25.6″)
- Table Load Capacity : 1,000 kg (2,205 lb)

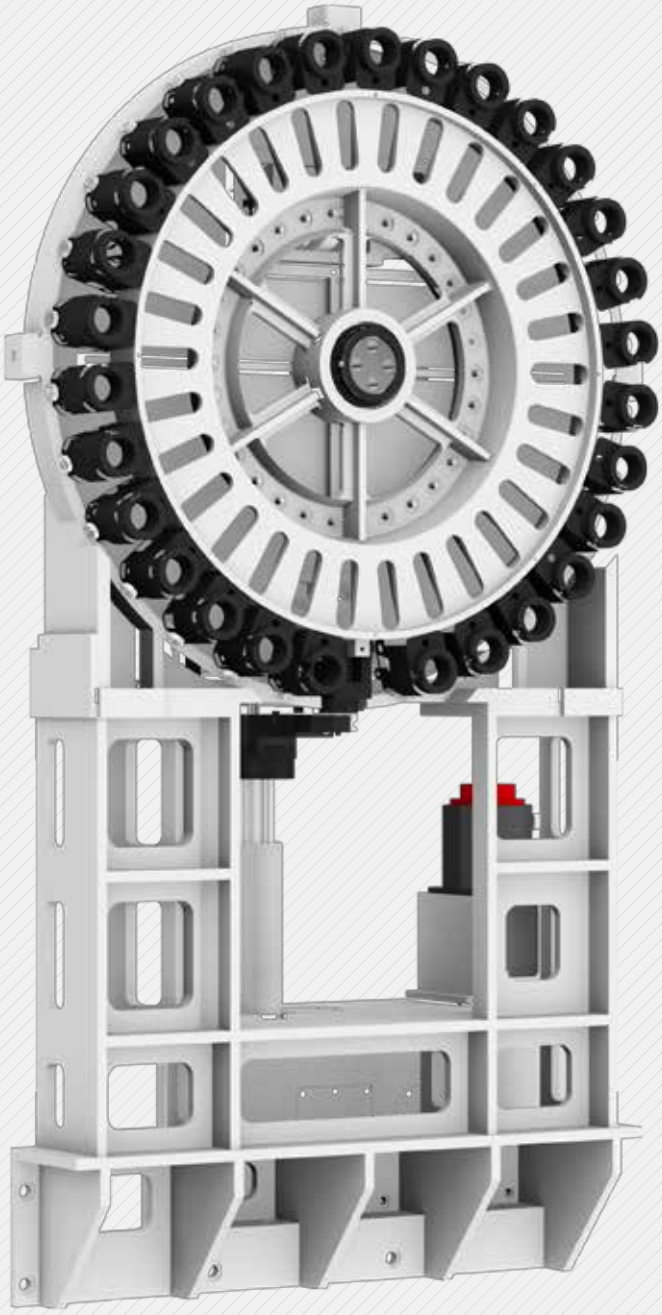

Magazine

The tool magazine and machining area are completely separated by a shutter so that chip, coolant and dust particles can be blocked.

This helps to maintain high precision and cleanliness. Also, 30-pocket tool magazine is provided for increased machining flexibility and user convenience.

- Number of Tools : 30 EA
- Tool Shank : BBT40
- Max. Diameter of Tools : (W.T/W.O)
  Ø80/Ø150 (Ø3.1″/Ø5.9″)
- Max. Length of Tools : 300 mm (11.8″)
- Max. Weight of Tools : 8 kg (17.6 lb)
- Tool Selection Method : Random

ATC

The Double Arm ATC provides fast and reliable tool changes, reducing non-cutting time.

- Tool Change Time

  Tool to Tool : 2 Sec

  Chip to Chip : 6.5 Sec

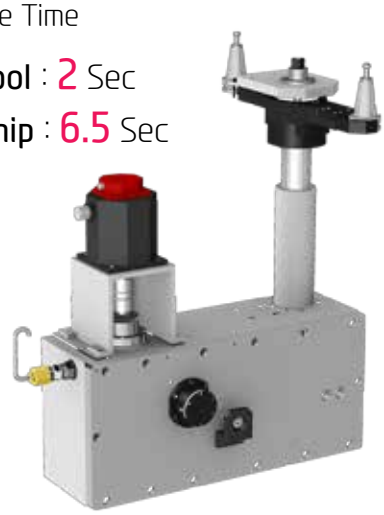

04 Smart System

Hi-MOLD6500

Software for Smart Operating and Machining

Faster processing and enhanced accuracy in are possible through the **HYUNDAI WIA Smart System**. The user friendly software and equipment monitoring of the Smart System maximizes productivity.

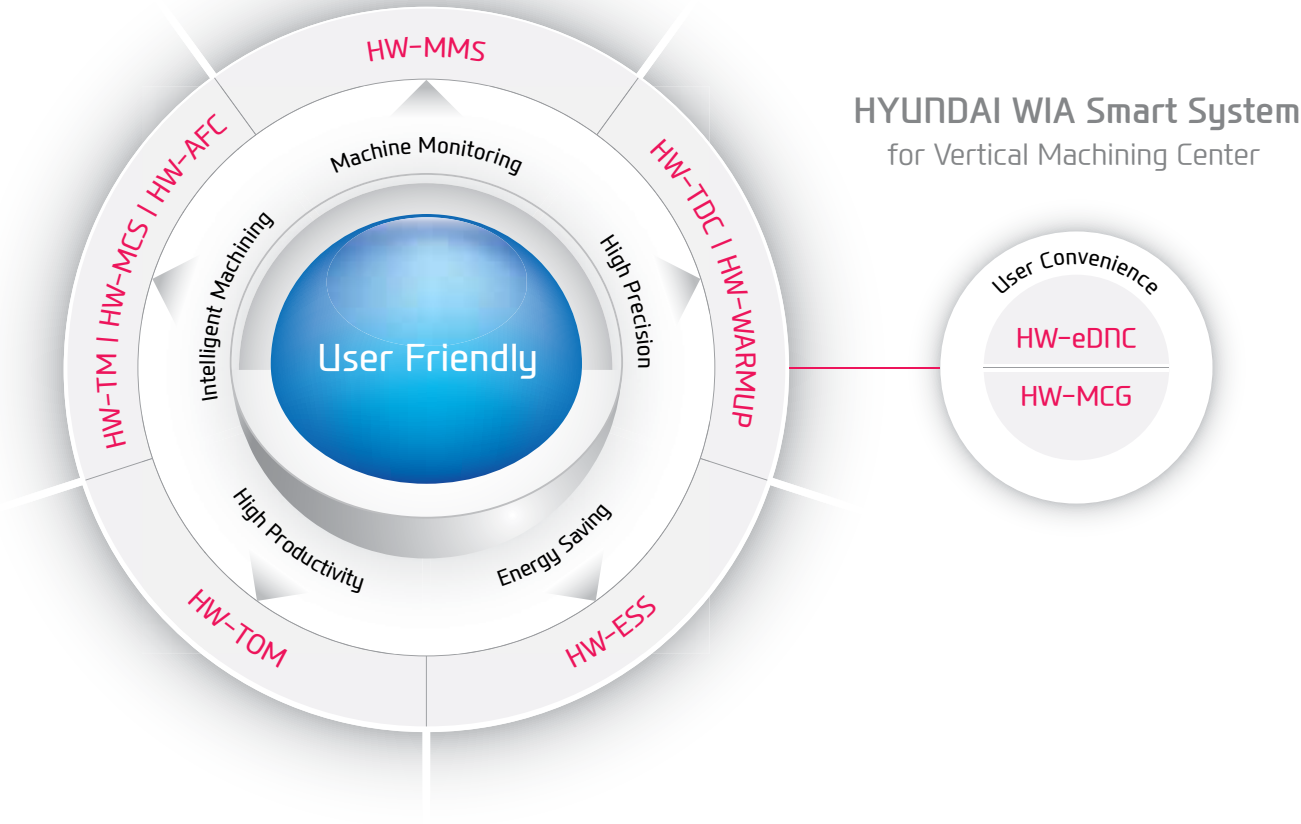

Mold-related Software

HW-AFC

HYUNDAI WIA
Adaptive Feed Control

Software that controls the feed automatically to maintain a certain working load to extend tool life as well as productivity.

HW-MCS

HYUNDAI WIA
Machining Condition Selection

Software that automatically sets cutting and feeding parameters according to the machining types (speed, degree, quality)

Smart Factory HW-MMS (HYUNDAI WIA-Machine Monitoring System) OPTION

A brand new manufacturing machine by HYUNDAI WIA, HW-MMS is a unique software capable of monitoring the operation status of manufacturing machines in factories, a smart solution to improve manufacturing conditions of customers.

01 Real-time monitoring of machine operation status (Cloud)

02 History and statistics of machine operation (Cloud)

03 History and statistics of alarm occurrence (Cloud)

04 History and statistics of work count (Cloud)

05 Remote diagnosis (Remote)

HW-MCG

HYUNDAI WIA
Machine Guidance

Software that offers operation, maintenance, management monitoring and various user friendly features.

HW-TDC

HYUNDAI WIA Thermal
Displacement Compensation

Software that measures the changes in the external environment as well as heat emission during processing to help reduce thermal displacement.

HW-WARMUP

HYUNDAI WIA
WARMing Up

Warm-up software that measures main spindle halt and offers system warm-up time automatically.

HW-ESS

HYUNDAI WIA
Energy Saving System

An environmental friendly software that reduces the unnecessarily wasted standby power waiting for an operation.

HW-TOM

HYUNDAI WIA
Tool Offset Measurement

User friendly GUI software that indicates tool length, diameter, and damage (H/W excluded)

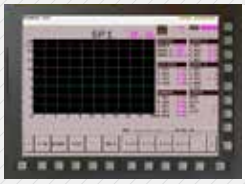

OPTION

HW-TM

HYUNDAI WIA
Tool Monitoring

A tool monitoring software which analyzes the load of the spindle motor to determine and monitor possible damage of tools.

05

Hi-MOLD6500

Mold Package

Powerful Mold Package,
HYUNDAI-WIA Mold All in One

HWM ALL-IN-ONE

To enhance mold machining, the "HWM ALL-IN-ONE" is provided as a standard feature for Hi-MOLD6500.

This ensures accurate and high quality surface finishing and contouring.

Mold Package Specification

HWM ALL IN ONE		Standard	Option
AICC II Package	600 block	●	
	1,000 block		●
S/W : HW-MCS, HW-AFC		●	●
Auto Power Off		●	●
Spindle Heat Distortion Compensation Device (8 Channels)		●	●
Cutting Air Blow		●	●
Auto Tool Measuring Device		●	●
Data Server 1GB		●	●

- High Speed Contouring Control (AICC II : 600 Block)
- Automatic Power Offf Device

3 Main Spindle Cooling Device (8-channel)
Maintains temperature on the main spindle from thermal displacement. (heat sensor)

4 Cutting Air Blow
Cutting air blow is provided for mold machining.

5 Auto Tool Measuring Device (RENISHAW TS27R)
Detects and sets tool length, and attrition (Graphic User Interface included)

Thermal Displacement Compensation Device

Thermal displacement of the spindle is minimized by the use of cooling techniques.
This provides high accuracy when machining at high speed.

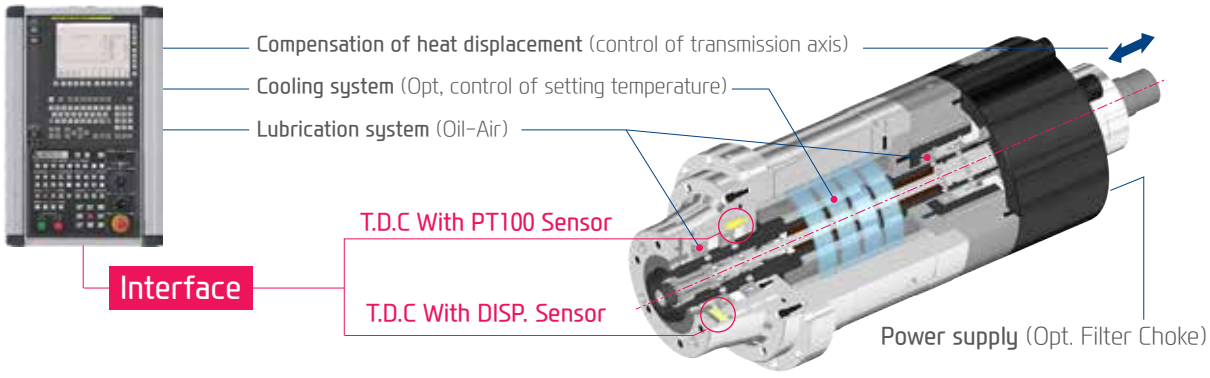

06

Hi-MOLD6500

User Convenience

OPTION

Various Devices for User Convenience

Measuring Device

Touch Sensor

Workpiece coordinate values can be set automatically using the optional spindle probe.

TLM – Laser & Touch

Tool lengths and diameters can be set automatically using the optional tool setter. This can also be used to monitor tool attrition and detect broken tools.

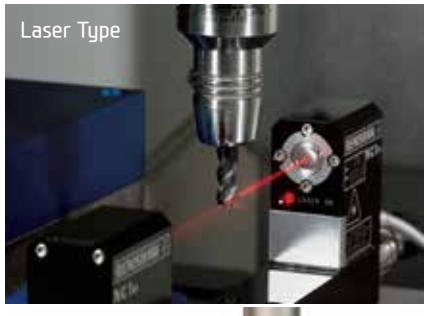

Precision Device

Linear Scale

Linear scales can be applied when highly accurate positioning is required.

Hydraulic Device

Hydraulic Supply Unit

Instead of the standard hydraulic supply unit, an optional fixture unit can bring the pressure up to 80 bar (1,160 psi), maximizing the clamping force on the fixture.

Environment Device

Oil Skimmer

An oil skimmer can increase coolant and tool life by removing tramp oil contaminants.

Mist Collector

Mist Collector reduces the amount of smoke and oil mist in the air. This helps build a safe and comfortable working environment and improve durability.

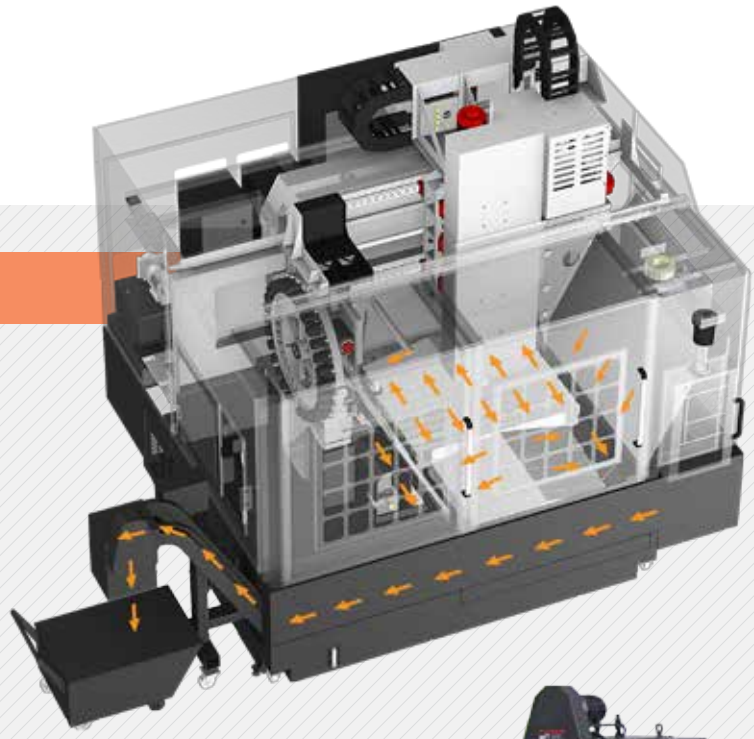

Chip Disposal Process

Coolant Unit

Std. Coolant (Nozzle)	Standard
Bed Flushing Coolant	Standard
Through Spindle Coolant (20bar[290psi])	Standard
Shower Coolant	Option
Gun Coolant	Option

Chip Conveyor Front (Left)

Chip Conveyor

Timely and effective disposal of chips will enhance productivity as well as the working environment.

- **Hinge Belt Type** : Highly efficient when disposing a lot of chips. Capable of handling stringy chips. **(Long Chip)**
- **Scraper Type** : Convenient for shortly cut chips.. **(Short Chip)**
- **Drum Filter Type** : Advantageous in precision, as the chips do not flow in to the coolant nozzle. **(AL Chip)**

HW-ecoPS

You can **save 20%** of energy when you choose the Huyundai WIA Eco Saving System which provides Screen Saver, Auto Power Off and Hydraulic Servo Motor Auto Control.

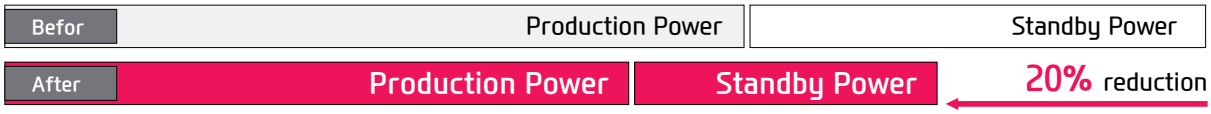

SPECIFICATIONS

Standard & Optional

● : Standard ○ : Option ☆ : Prior Consultation – : Non Applicable

Spindle		Hi-MOLD6500
20,000rpm (22/18.5kW [29.5/24.8 HP)	FANUC	●
24,000rpm (22/18.5kW [29.5/24.8 HP)	FANUC	○
Spindle Cooling System		●
ATC		
ATC Extension	24	–
	30	●
Tool Shank Type	BBT40	●
	BCV40	☆
	HSK-A63	–
U-Center	D'andrea	–
Pull Stud	45°	●
	60°	–
	90°	–
Table & Column		
APC		–
Tap Type Table		–
T-Slot Table		●
NC Rotary Table		☆
High Column	300mm (11.8")	–
Coolant System		
Std. Coolant (Nozzle)		●
Bed Flushing Coolant		●
Through spindle coolant*	20bar (290 psi)	○
	30bar (435 psi), 20 ℓ (5.3 gal)	○
	70bar (1,015 psi), 15 ℓ (4 gal)	○
	70bar (1,015 psi), 30 ℓ (7.9 gal)	–
Top Cover (Thru coolant applied when necessary)		●
Shower Coolant		○
Gun Coolant		○
Side Oil Hole Coolant		–
Air Gun		○
Cutting Air Blow		●
Tool Measuring Air Blow (Only for TLM)		●
Air Blow for Automation		☆
Thru MQL Device (Without MQL)		☆
Coolant Chiller		☆
Power Coolant System (For Automation)		☆
Chip Disposal		
Coolant Tank	400 ℓ (105.7 gal)	●
Chip Conveyor (Hinge/Scraper)	Left(Left)	○
	Left(Rear)	–
Special Chip Conveyor (Drum Filter)		☆
Chip Wagon	Standard (180 ℓ [47.5 gal])	○
	Swing (200 ℓ [52.8 gal])	○
	Large Swing (290 ℓ [76.6 gal])	○
	Large Size (330 ℓ [87.2 gal])	○
	Customized	☆
S/W		
Machine guidance (HW-MCG)		●
Tool Monitoring (HW-TM)		○
DNC Software (HW-eDNC)		○
Spindle Heat Distortion Compensation (HW-TDC)		●
Spindle Warm up Function (HW-WARMUP)		●
Energy Saving System (HW-ESS)		●
Machine Monitoring System (HW-MMS)		○
Tool Offset Measurement (HW-TOM)		●
Machining Condition Selection (HW-MCS)		●
Adaptive Feed Control (HW-AFC)		●
Conversational Program (HW-DPRO)		○

Electric Device		Hi-MOLD6500
Call Light	1 Color : ■	●
Call Light	2 Color : ■ ■	○
Call Light	3 Color : ■ ■ ■	○
Call Light & Buzzer	3 Color : ■ ■ ■ B	○
Work Light		●
Electric Cabinet Light		○
Remote MPG		●
3 Axis MPG		○
Work Counter	Digital	☆
Total Counter	Digital	☆
Tool Counter	Digital	☆
Multi Tool Counter	6 EA	☆
	9 EA	☆
Electric Circuit Breaker		○
AVR (Auto Voltage Regulator)		○
Transformer	50kVA	○
Auto Power Off		●
Back up Module for Black out		○
Measuring Device		
Air Zero	TACO	○
	SMC	○
Work Measuring Device		○
TLM (Marposs/Renishaw/Blum)	Touch	●
	Laser	○
Tool Broken Detective Device		☆
Linear Scale	X/Y/Z Axis	○
Coolant Level Sensor (Only for Chip Conveyor, Bladder Type)		☆
Environment		
Air Conditioner		○
Dehumidifier		○
Oil Mist Collector		☆
Oil Skimmer (Only for Chip Conveyor)		○
MQL (Minimal Quantity Lubrication)		☆
Fixture & Automation		
Auto Door	Std.	○
	High Speed	☆
Auto Shutter (Only for Automatic System)		☆
Sub O/P		☆
NC Rotary Tablel/F	Single	☆
	Channel	☆
Control of Additional Axis	1Axis	○
	2Axis	☆
External M Code 4ea		○
Automation Interface		☆
I/O Extension (In & Out)	16 Contact	○
	32 Contact	○
Hyd. Device		
Std. Hyd. Unit	70bar (1,015psi)/ 14 ℓ (3.7 gal)	●
Center Type Hyd. Supply Unit	2x3(6Port)	☆
	2x5(10Port)	☆
Hyd. Unit for Fixture	45bar (652.7psi)	–
	70bar (1,015psi)	○
	100bar (1,450psi)	☆
	Customized	☆
ETC		
Tool Box		●
Customized Color	Need for Munsel No.	☆
CAD&CAM Software		☆

Through Spindle Coolant* : Please check the filter types with sales representative.

Specifications are subject to change without notice for improvement.

External Dimensions

unit : mm(in)

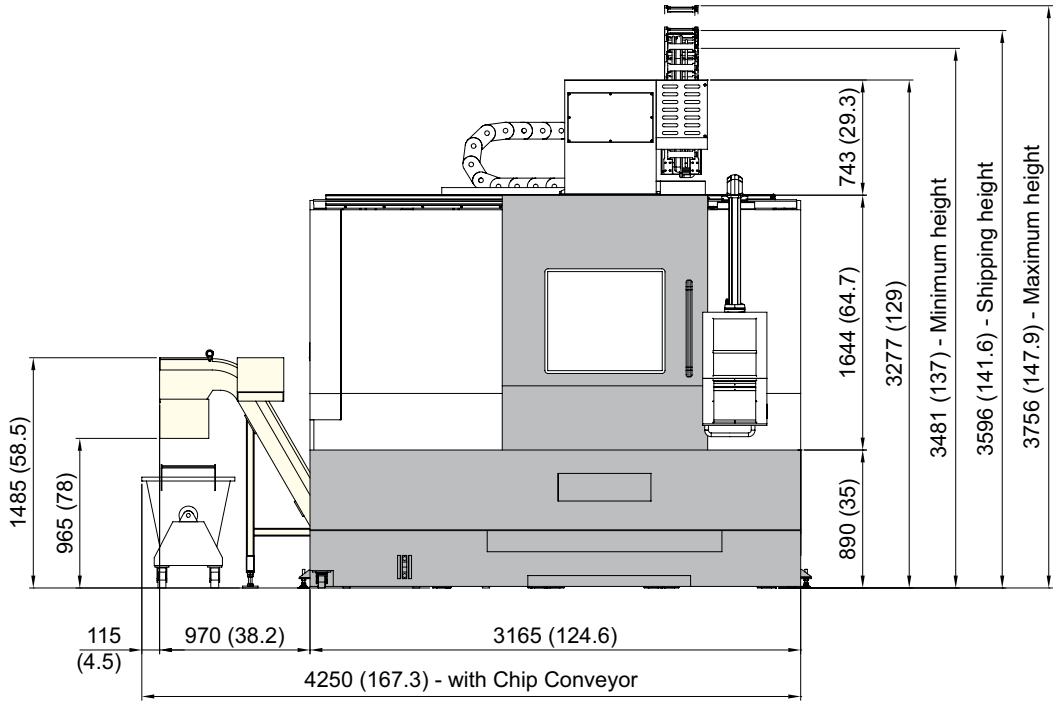

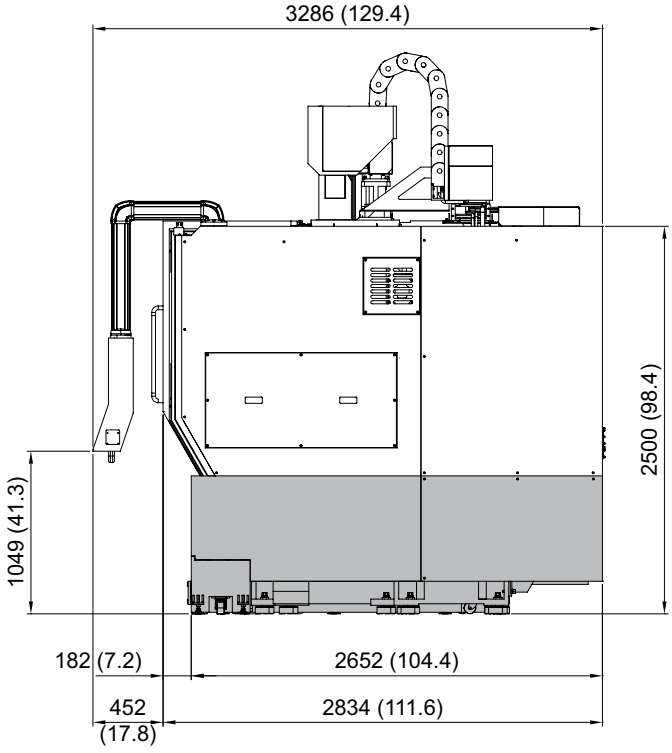

SPECIFICATIONS

Table Dimensions

unit : mm(in)

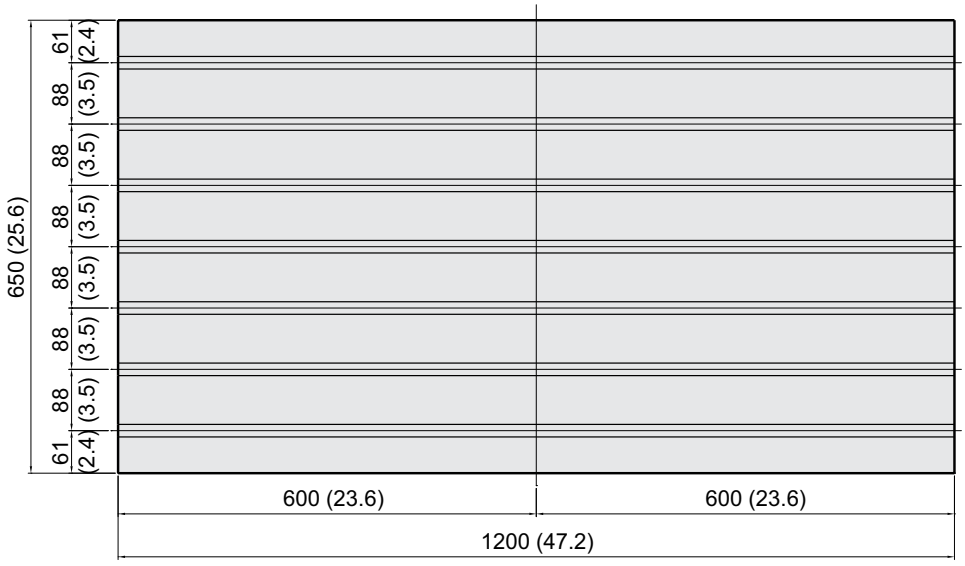

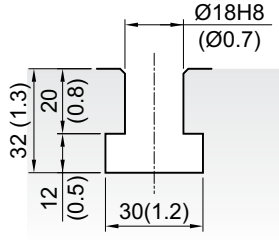

Detail T-Slot

Tool Shank

unit : mm(in)

BT40/BBT40, BIG PLUS

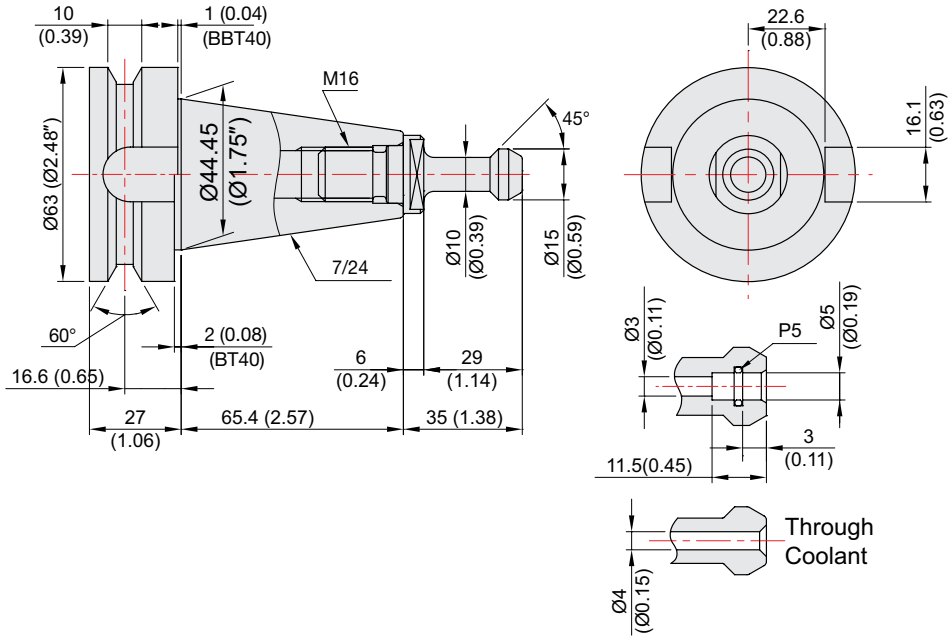

CAT40/BCV40

OPTION

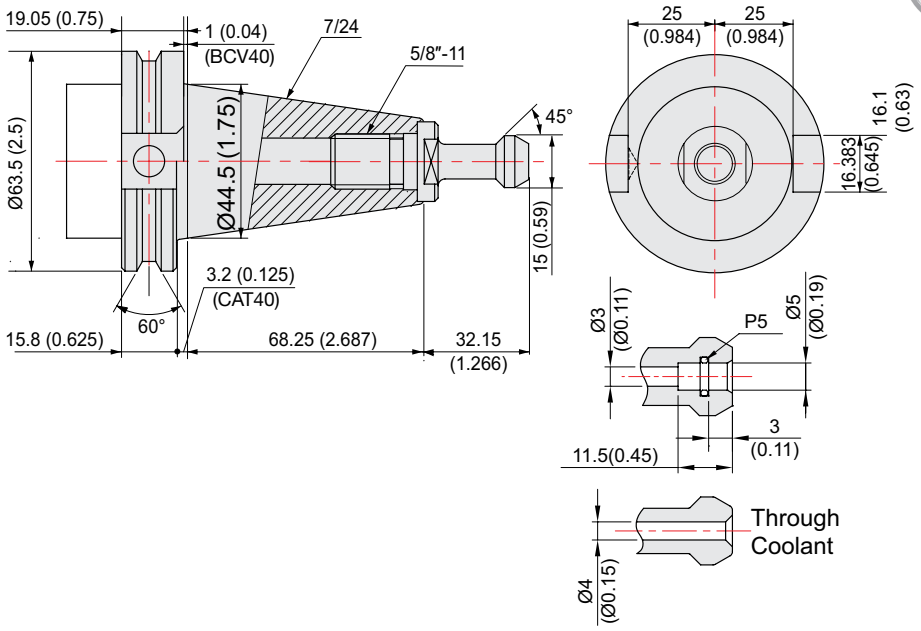

SPECIFICATIONS

Specifications

[ ] : Option

ITEM				Hi-MOLD6500
TABLE	Table Size (LxW)		mm(in)	1,200x650 (47.2"x25.6")
	Maximum Load Capacity		kg(lb)	1,000 (2,205)
	Table Change Time		sec	-
	Change Method		-	-
	Table Driving Method		-	-
SPINDLE	Spindle Taper		-	#40
	Spindle RPM		r/min	20,000 [24,000]
	Spindle Power Output (Max./Cont.)		kW(HP)	22/18.5 (29.5/24.8) [22/18.5 (29.5/24.8)]
	Spindle Torque (Max./Cont.)		N·m(lbf·ft)	98/80 (72.3/59) [53/37 (39.1/27.3)]
	Spindle Driving Method		-	BUILT-IN
FEED	Travel (X/Y/Z)		mm(in)	1,100/650/550 (43.3"/25.6"/21.7")
	Distance from Table Surface to SP		mm(in)	150 ~ 700 (5.9" ~ 27.6")
	Distance from Column to SP. center		mm(in)	260 (10.2")
	Rapid Traverse Rate (X/Y/Z)		m/min(ipm)	40/40/40 (1,575/1,575/1,575)
	Slide Type		-	ROLLER GUIDE
ATC	Number of Tools		ea	30
	Tool Shank		-	BBT40
	Max. Tool Dia. (W/T Adjacent Tool)		mm(in)	Ø80/Ø150 (Ø3.1"/Ø5.9")
	Max. Tool Length		mm(in)	300 (11.8")
	Max. Tool Weight		kg(lb)	8 (17.6)
	Tool Selection Method		-	RANDOM
	Tool Change Time	T-T	sec	2
		C-C	sec	6.5
TANK CAPACITY	Coolant Tank		ℓ (gal)	400 (105.7)
	Lubricating Tank		ℓ (gal)	3 (0.8)
	Hydraulic Tank		ℓ (gal)	15 (4)
POWER SUPPLY	Air Consumption (0.5MPa)		ℓ /min	500
	Electric Power Supply		KVA	40
	Thickness of Power Cable		Sq	Over 50
	Voltage		V/Hz	220/60 (200/50*)
MACHINE	Floor Space (L×W)		mm(in)	3,165×2,652 (124.6"×104.4")
	Height		mm(in)	3,018 (118.8")
	Weight		kg(lb)	11,000 (24,251)
NC	Controller		-	FANUC 31i-B

*) Using 50Hz voltage instead of 60Hz may lower the output of motors. (excluding servo motors and inverter motors)

Specifications are subject to change without notice for improvement.

CONTROLLER

FANUC 31i-B

[ ] : Option ☆ Needed technical consultation

Controlled axis / Display / Accuracy Compensation	
Control axes	3 axes (X, Y, Z) 4 axes (X, Y, Z, B)
Simultaneously controlled axes	3 axes [Max. 4 axes]
Least setting Unit	X, Y, Z axes : 0.001 mm (0.0001 inch)
	B axes : 1 deg [0.001] deg
Least input increment	X, Y, Z axes : 0.001 mm (0.0001 inch)
	B axes : 1 deg [0.001] deg
Inch / Metric conversion	G20 / G21
High response vector control	
Interlock	All axes / Each axis
Machine lock	All axes
Backlash compensation	± 0 ~ 9999 pulses (Rapid traverse / Cutting feed)
Position switch	
LCD / MDI	10.4 inch color LCD
Feedback	Absolute motor feedback
Stored stroke check 1	Over travel
Stored pitch error compensation	
Operation	
Automatic operation (Memory)	
MDI operation	
DNC operation	Needed DNC software / CF card
Program restart	
Wrong operation prevention	
Program check function	Dry run, Program check
	Z axes Machine lock, Stroek check before move
Single block	
Search function	Program Number / Sequence Number
Interpolation functions	
Nano interpolation	
Positioning	G00
Linear interpolation	G01
Cylinderical interpolation	G02, G03
Exact stop mode	Single : G09, Continuous : G61
Dwell	G04, 0 ~ 9999.9999 sec
Skip	G31
Reference position return	1st reference : G28
	2nd reference : G27
	Ref. position check : G30
Thread synchronous cutting	G33
Helical interpolation	Circular + Linear interpolation 2 axes(max.)
Feed function / Acc. & Dec. control	
Manual feed	Rapid traverse
	Jog : 0~5,000mm/min (197 ipm)
	Manual handle : x1, x10, x100 pulses
	Reference position return
Cutting Feed command	Direct input F code
Feedrate override	0 ~ 200% (10% Unit)
Rapid traverse override	F0% (F1%), F25%, F50%, F100%
Override cancel	
Feed per minute	G94
Feed per revolution	G95
Look-ahead block	40 Block
	200 Block (Mold)
Program input	
Tape Code	EIA / ISO
Optional block skip	1 ea
Absolute / Incremental program	G90 / G91
Program stop / end	M00, M01 / M02, M30
Maximum command unit	± 999,999.999 mm (± 99,999.9999 inch)
Plane selection	X-Y : G17 / Z-X : G18 / Y-Z : G19
Workpiece coordinate system	G52, G53, 6 pairs (G54 ~ G59)
Manual absolute	Fixed ON
Programmable data input	G10
Sub program call	10 folds nested
Custom macro	#100 ~ #149, #500 ~ #549
G code system	A
Programmable mirror image	G51.1, G50.1
G code preventing buffering	G4.1
Including Chamfering / Corner R	
Canned cycle	G73, G74, G76, G80 ~ G89
Coordinate rotation	G68, G69

Auxiliary function / Spindle speed function	
Auxiliary function	M & 4 digit
Level-up M Code	Multi / Bypass M code
Spindle speed command	S & 5 digit , Binary output
Spindle override	0% ~ 150% (10% Unit)
Spindle orientation	M19
FSSB high speed rigid tapping	
Tool function / Tool compensation	
Tool function	Max. T 8 digit
Tool life management	256 pairs ☆
Tool offset pairs	64 pairs
Tool nose radius compensation	G40, G41, G42
Tool nose length compensation	G43, G44, G49
Tool offset memory C	Tool length, diameter, abrasion(length, diameter)
Tool length measurement	Z axes Input C
Editing function	
Part program storage size	640m (256KB)
No. of registerable programs	500 ea
Program protect	
Background editing	
Extended part program editing	Copy, move and change of NC program
Memory card program edit	
Data input / output & Interface	
I/O interface	RS 232C serial port, CF card, USB memory
	Embedded Ethernet interface
Screen hard copy	
External message	
External key input	
External workpiece number search	
Automatic data backup	
Setting, display and diagnosis	
Self-diagnosis function	
History display	Alarm & Operator message & Operation
Run hour / Parts count display	
Maintenance information	
Actual cutting feedrate display	
Display of spindle speed / T code	
Graphic display	
Operating monitor screen	Spindle / Servo load etc.
Power consumption monitoring	Spindle & Servo
Spindle / Servo setting screen	
Multi language display	Support 20 languages
Display language switching	Selection of 5 optional Languages
LCD Screen Saver	Screen saver
Processing select	Speed/ridigity setting

Option	
Additional optional block skip	9 ea ☆
Fast ethernet	Needed option board
Data server	Needed option board
Protection of data at 8 levels	
Sub Spindle control	
Polar coordinate command	G15, G16
Polar coordinate interpolation	G12.1, G13.1
Cylinderical interpolation	G07.1
One-way positioning	G60
Stored stroke check 2, 3	
Inverse-time feed	G93
Scaling	G50, G51
Manual guide i	Conversational auto program
Handle interrupt	
Manual handle feed	2/3 units
Additional custom macro variables	#100~#199, #500~#999
	#100~#199, #500~#999, #98000~#98499
Retraction for rigid tapping	
Tool management function	
Tool offset number	Max. 2000 pair ☆
Program storage capacity	512KB ~ 8MB ☆
Program registration number	Max. 4000 ea ☆
Additional work coordinate	48 pair (G54.1 P1 ~ P48)
AICC II	200 block
	400 / 600 / 1000 block ☆

Figures in inch are converted from metric values.
The FANUC controller specifications are subject to change based on the policy of company CNC supplying.

GLOBAL NETWORK

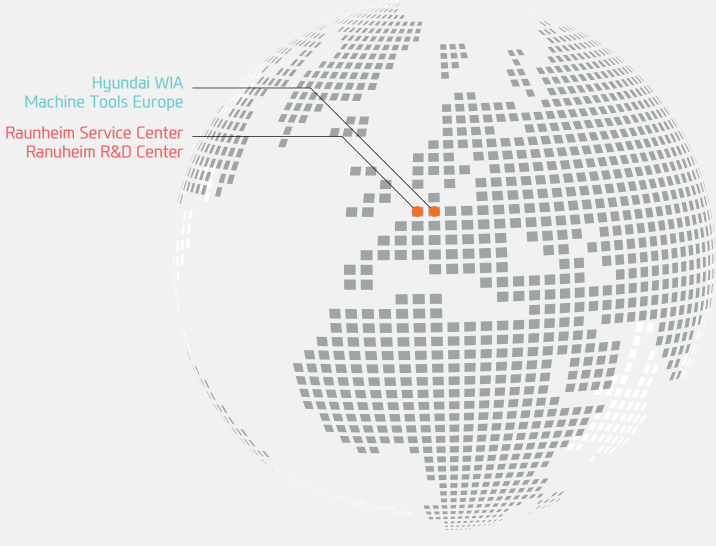

GLOBAL NETWORK

HEADQUARTER

Changwon Technical Center / R&D Center / Factory

153, Jeongdong-ro, Seongsan-gu, Changwon-si,
Gyeongsangnam-do, Korea (Zip Code : 51533)
TEL : +82 55 280 9114 FAX : +82 55 282 9680

Uiwang Technical Center / R&D Center

37, Cheoldobangmulgwan-ro, Uiwang-si, Gyeonggi-do,
Korea (Zip Code : 16082)
TEL : +82 31 596 8209 Fax : +82 55 210 9804

OVERSEAS OFFICES

HYUNDAI WIA Machine Tools America

265, Spring Lake Drive, Itasca, IL, 60143

TEL : +1 630 625 5600
FAX : +1 630 625 4733

HYUNDAI WIA Machine Tools Europe

Kaiserleipromenade 5, 63067 Offenbach, Germany

TEL : +49 69271 472 701
FAX : +49 69271 472 719

Raunheim Service Center Raunheim R&D Center

Frankfurter. 63, 65479 Raunheim, Germany

TEL : +49 6142 9256 111
FAX : +49 6142 9256 100

India Branch Office

#4/169, Rajiv Gandhi Salai, (OMR), Kandanchavadi, Chennai-600 096, Tamilnadu, India
TEL: +91-44-3290-1719

Jiangsu HYUNDAI WIA

Company No.6 Fenghuang Road, Fenghuang Town, Zhangjjagang City, Jiangsu province, China

TEL : +86 512 5672 6808
FAX : +86 512 5671 6960

Hyundai WIA Machine Tools China Shanghai Branch Office

1-3F, Bldg6, No.1535 Hongmei Road, Xuhui District, Shanghai, China

TEL : +86 021 6427 9885
FAX : +86 021 6427 9890

Beijing Branch Office

Floor 14, Zhonghangji Plaza B, No.15 Ronghua South Road, BDA Dist., Daxing Dist., Beijing, China 100176

TEL : +86 010 8453 9850
FAX : +86 010 8453 9853

Guangzhou Branch Office

Room 311, Unit 1-3, POLY TAL TU WUN, Hanxi Avenue, Panyu District, Guangzhou, China

TEL : +86 020 8550 6595
FAX : +86 020 8550 6597

Chengdu Branch Office

NO.508 Room, B Block, AFC Plaza, NO.88 Jiaozi Road, High-tech Zone, Chengdu, China

TEL : +86 028 8665 2985
FAX : +86 028 8665 2985

Qingdao Branch Office

Room 1207, Cai Fu Building, 182-6 Haier Middle Road, Qingdao, China

TEL : +86 532 8667 9334
FAX : +86 532 8667 9338

Wuhan Office

306-2, A Tower,Jiayu Gpmggian, No12 Chuangye Road, Economic Development Zone, Wuhan, Hubei, China

TEL : +86 027 5952 3256
FAX : +86 027 5952 3256

Chongqing Office

Room 951, #3, Jinrongcheng T3, Jiangbei, Chongqing, China

TEL : +86 23 6701 2970

Hi-MOLD6500 Movie 1 Hi-MOLD6500 Movie 2 Hi-MOLD6500 3D Movie

http://machine.hyundai-wia.com

Head Office & Factory

153, Jeongdong-ro, Seongsan-gu, Changwon-si, Gyeongsangnam-do **Tel** +82 55 280 9500

Overseas Sales Team

16F, 37, Cheoldobangmulgwan-ro, Uiwang-si, Gyeonggi-do **Tel** +82 31 593 8173

HYUNDAI WIA Machine Tools America

265 Spring Lake Drive,Itasca, IL, 60143 **Tel** +1 (630) 625 5600 **Fax** +1 (630) 625 4733

HYUNDAI WIA Machine Tools Europe

Kaiserleipromenade 5, D-63067 Offenbach, Germany **Tel** +49 69271 472 701 **Fax** +49 69271 472 719

India Branch Office

#4/169, Rajiv Gandhi Salai, (OMR), Kandanchavadi, Chennai-600 096, Tamilnadu, India **Tel** +91 44 3290 1719

2017-11 001.008 ENG